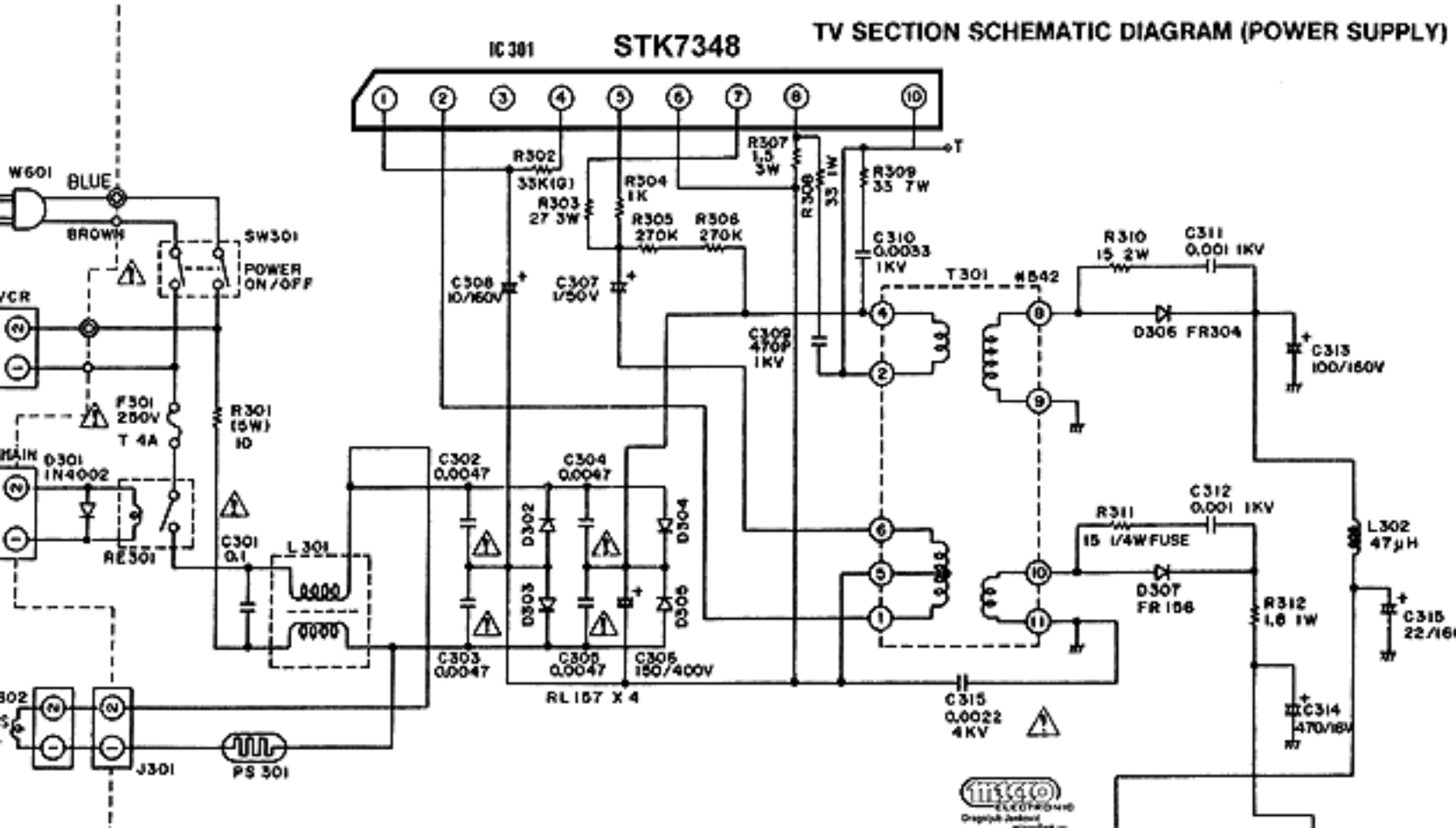TV SECTION SCHEMATIC DIAGRAM (POWER SUPPLY)