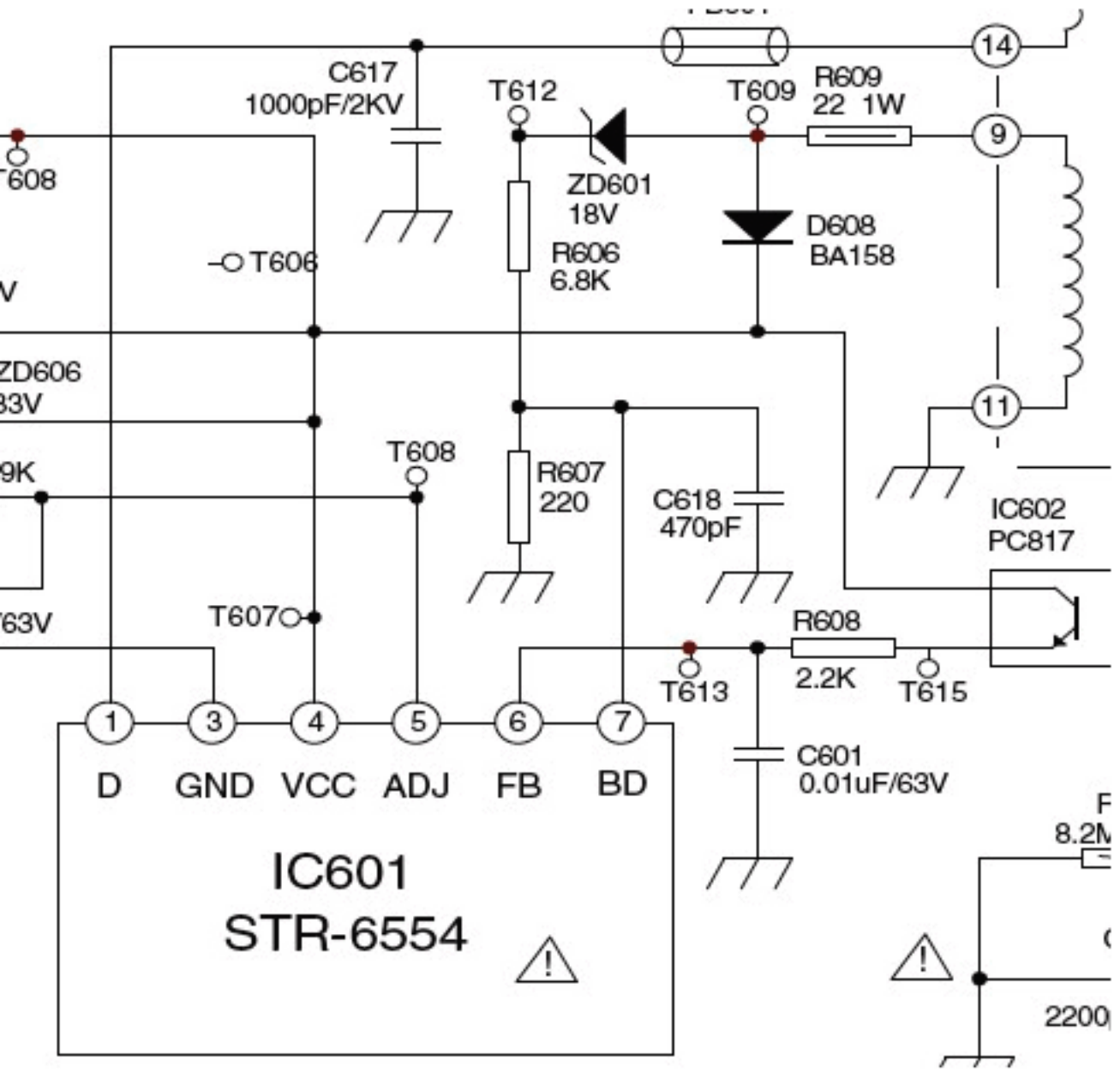
C617
1000pF/2KV
T612
T609
R609
22 1W
14
9
11
T608
ZD601
18V
D608
BA158
T606
R606
6.8K
ZD606
T608
R607
220
C618
470pF
IC602
PC817
T607
R608
2.2K
T613
T615
1
3
4
5
6
7
D
GND
VCC
ADJ
FB
BD
C601
0.01uF/63V
IC601
STR-6554