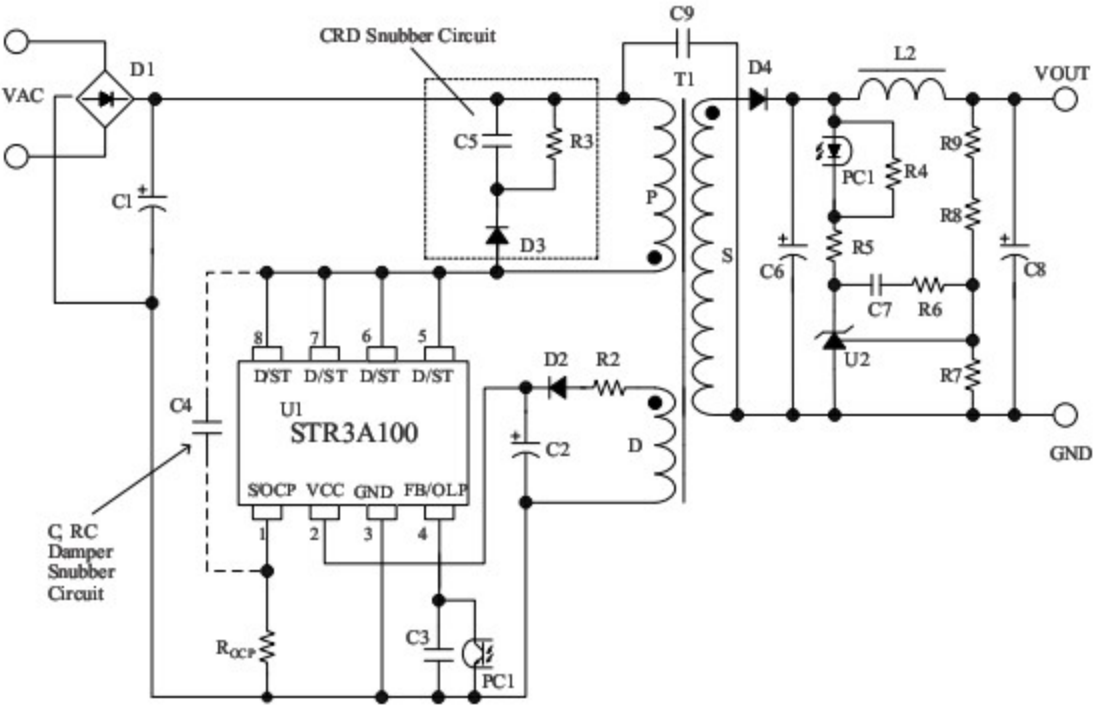
CRD Snubber Circuit
C9
D1
VAC
T1
D4
L2
VOUT
C5
R3
PC1
R4
R9
C1
P
D3
R8
S
R5
C6
C8
C7
R6
U2
R7
8
7
6
5
D2
R2
D/ST
D/ST
D/ST
D/ST
U1
STR3A100
C4
C2
D
GND
S/OCP
VCC
GND
FB/OLP
1
2
3
4
C, RC
Damper
Snubber
Circuit
C3
PC1
$R_{OCP}$