3-1-1 Thyristors

Part No.	V_{DRM} (V)	$I_{T(AV)}$ (A)	I_{GT} (max) (mA)	Package	Fig. No.
TF321M-A	200	3	0.1	TO-220	1
TF321M			10	TO-220	
TF321S			15	TO-220F	2
TF521M		5	15	TO-220	1
TF521S				TO-220F	2
TF821M		8	15	TO-220	1
TF821S				TO-220F	2
TF341S	400	3	15	TO-220F	2
TF341M-A			0.1	TO-220	1
TF341M			10	TO-220	
TF541S-A		5	0.2	TO-220F	2
TF541M			15	TO-220	1
* TF541S				TO-220F	2
TF841M		8	15	TO-220	1
* TF841S				TO-220F	2

Part No.	V_{DRM} (V)	$I_{T(AV)}$ (A)	I_{GT} (max) (mA)	Package	Fig. No.
TF361M-A	600	3	0.1	TO-220	1
TF361M			10	TO-220	
TF361S			15	TO-220F	2
TF561S-A		5	0.2	TO-220F	
TF561M			15	TO-220	1
* TF561S				TO-220F	2
SLA0201		5×4 circuits	10	SIP12Pin	3
TF861M		8	15	TO-220	1
* TF861S				TO-220F	2

* UL recognized products are available.

External Dimensions

• No. 1

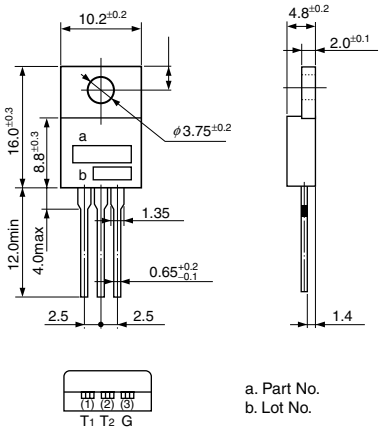

• No. 2

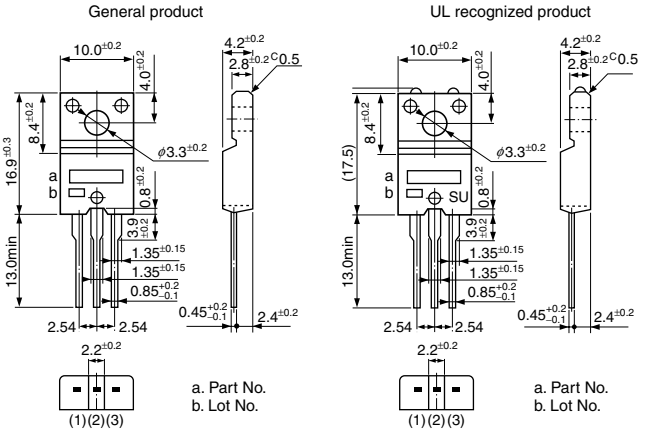

Terminal No.	
(1)	Cathode (K)
(2)	Anode (A)
(3)	Gate (G)

• No. 3

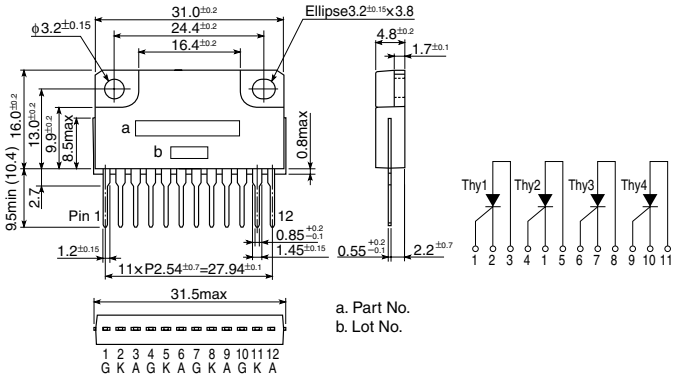

(unit: mm)